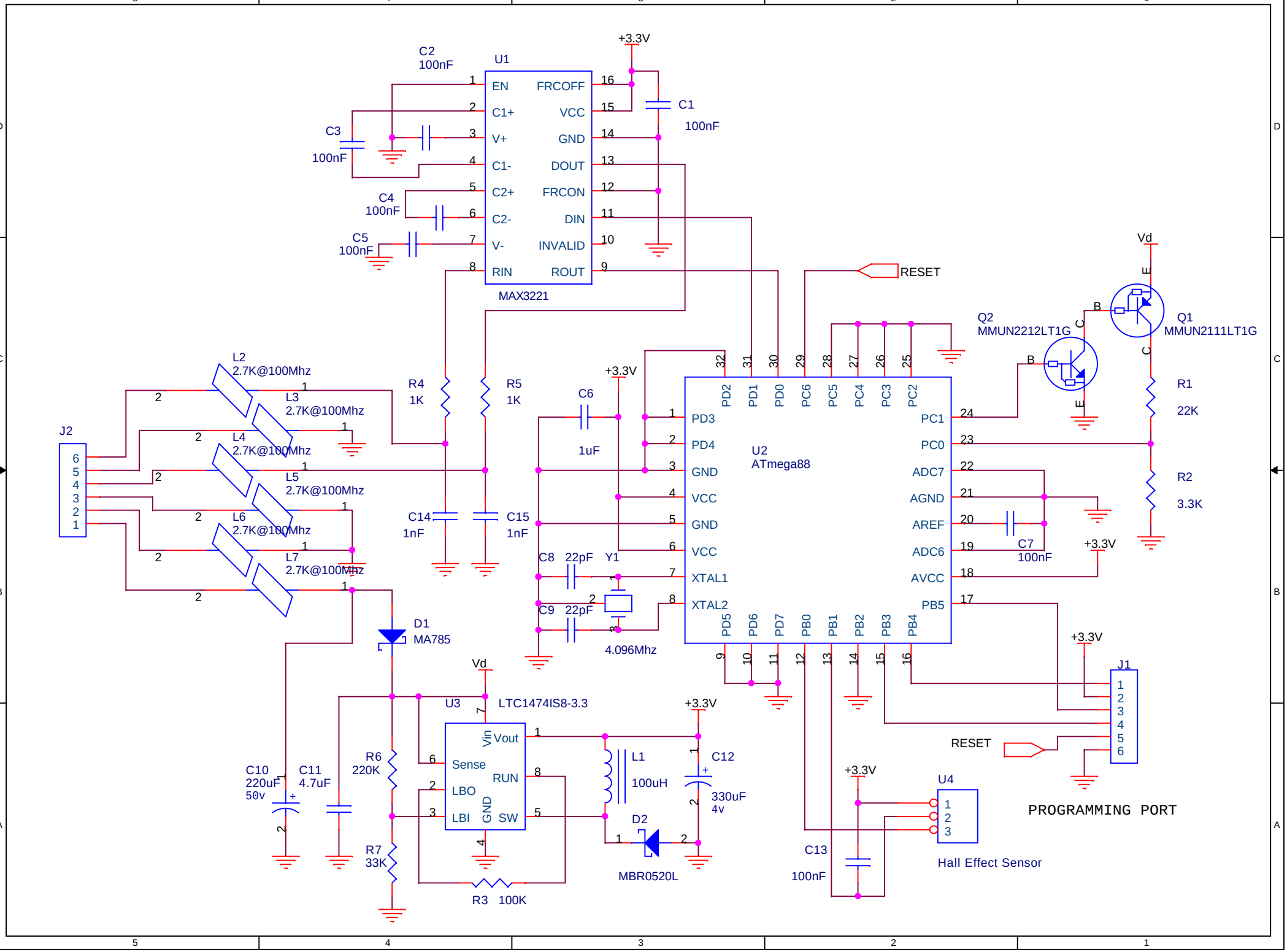
U1
MAX3221
EN
C1+
V+
C1-
C2+
C2-
V-
RIN
FRCOFF
VCC
GND
DOUT
FRCON
DIN
INVALID
ROUT
C1 100nF
C2 100nF
C3 100nF
C4 100nF
C5 100nF
+3.3V
RESET
Vd
Q1 MMUN2111LT1G
Q2 MMUN2212LT1G
R1 22K
R2 3.3K
R4 1K
R5 1K
C6 1uF
C14 1nF
C15 1nF
L2 2.7K@100Mhz
L3 2.7K@100Mhz
L4 2.7K@100Mhz
L5 2.7K@100Mhz
L6 2.7K@100Mhz
L7 2.7K@100Mhz
J2
D1 MA785
U2 ATmega88
PD3
PD4
GND
VCC
GND
VCC
XTAL1
XTAL2
PD2
PD1
PD0
PC6
PC5
PC4
PC3
PC2
PC1
PC0
ADC7
AGND
AREF
ADC6
AVCC
PB5
PD5
PD6
PD7
PB0
PB1
PB2
PB3
PB4
C8 22pF
C9 22pF
Y1
4.096Mhz
C7 100nF
J1
PROGRAMMING PORT
U3 LTC1474IS8-3.3
Vin
Vout
Sense
RUN
LBO
LBI
GND
SW
R6 220K
R7 33K
R3 100K
C10 220uF 50v
C11 4.7uF
L1 100uH
D2 MBR0520L
C12 330uF 4v
C13 100nF
U4
Hall Effect Sensor